Drawn	brembo	BRAKE DISC KIT DT ϕ330	208.C890.36	-
Deponti			Date	06.09.24
Checked				
Caronia				

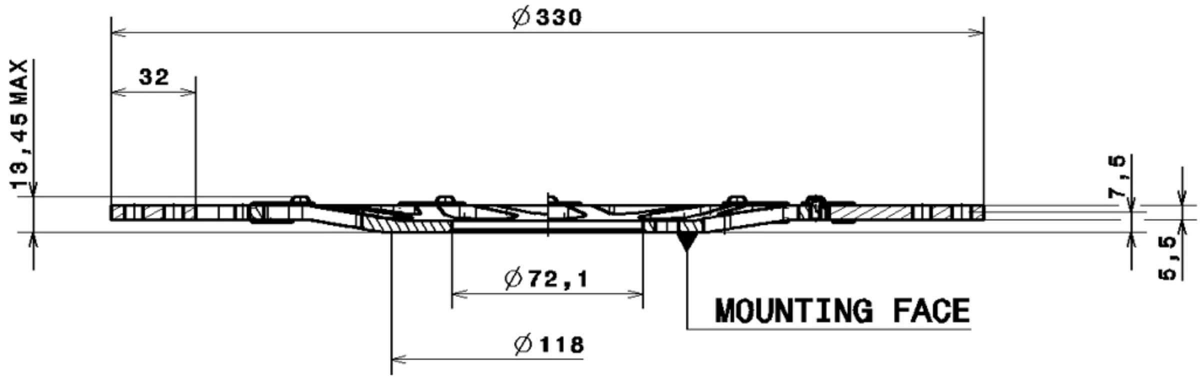

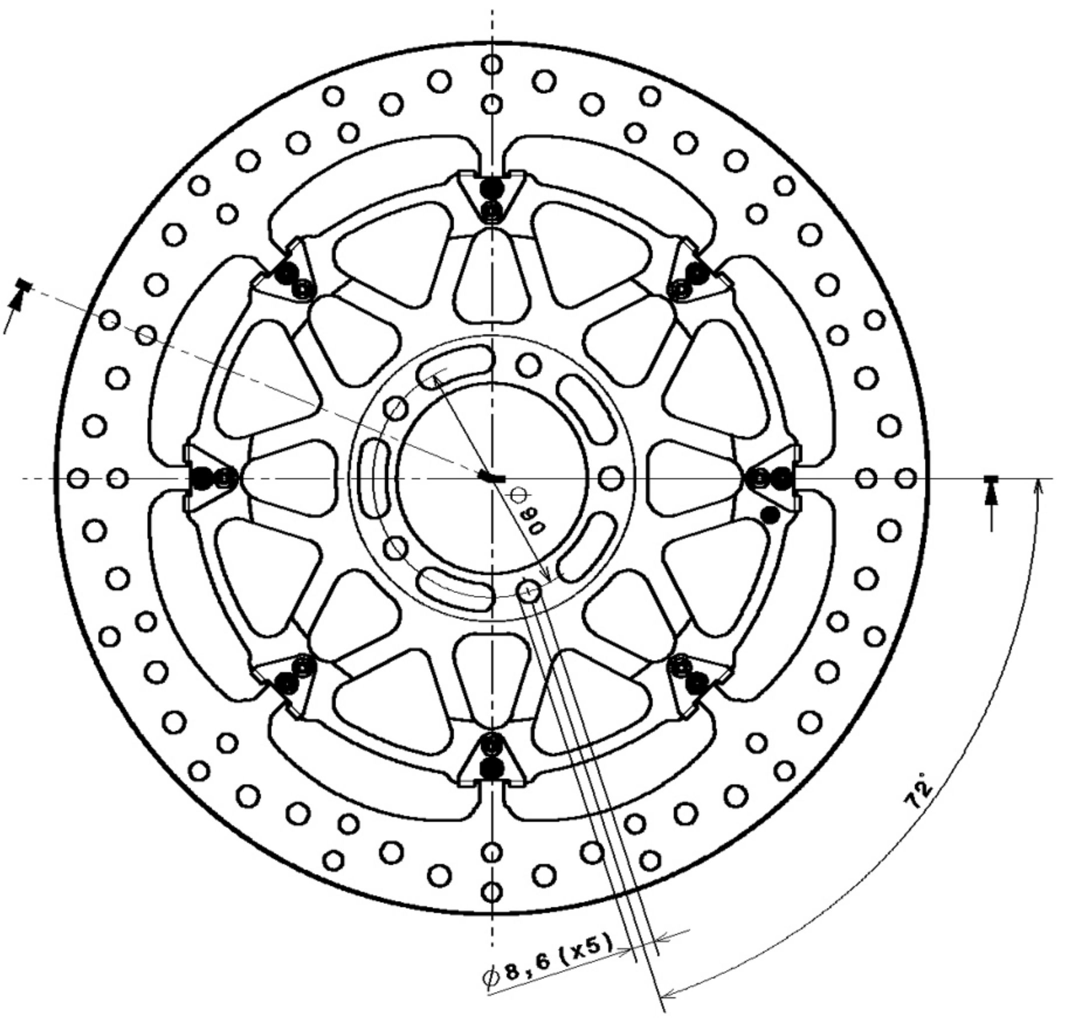

ITEMS INSIDE THE KIT

DESCRIPTION	QTY
BRAKE DISC DT 330x5,5	2
INSTRUCTION SHEET	1
BREMBO SMALL STICKER	2

DRAWING CHANGES	Pos.	
A	-	FIRST RELEASE ##.##.## Deponti