Drawn	brembo	BRAKE DISC KIT DT ∅320	208.A985.28
Deponti			Date 03.09.24
Checked			
Caronia			

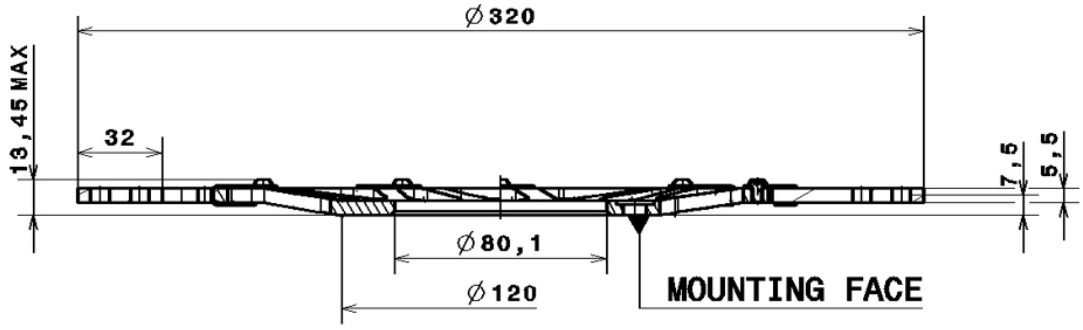

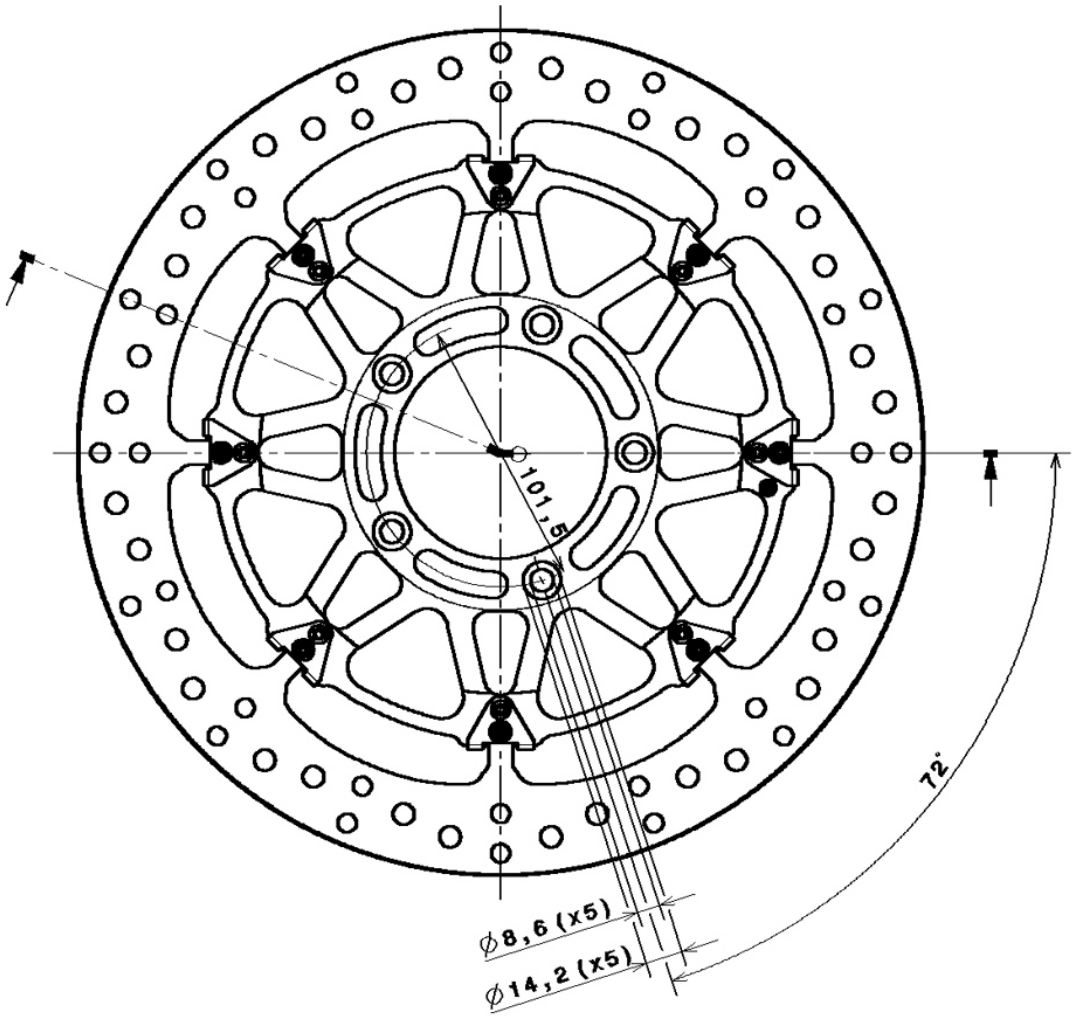

ITEMS INSIDE THE KIT

DESCRIPTION	QTY
BRAKE DISC DT 320x5,5	2
INSTRUCTION SHEET	1
BREMBO SMALL STICKER	2

DRAWING CHANGES	Pos.	FIRST RELEASE	## ## ##	Deponti
	A	-		