Drawn	brembo	BRAKE DISC KIT DP ⌀320	208.9737.56	-
Deponti				
Checked				
Caronia			Date	02.08.24

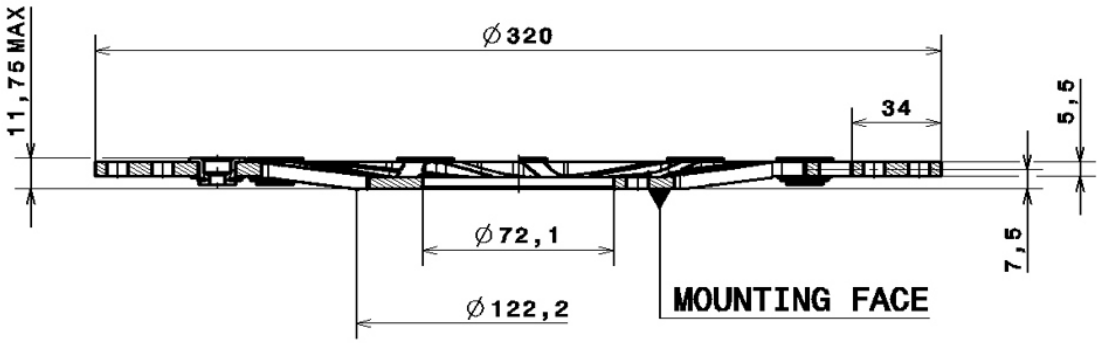

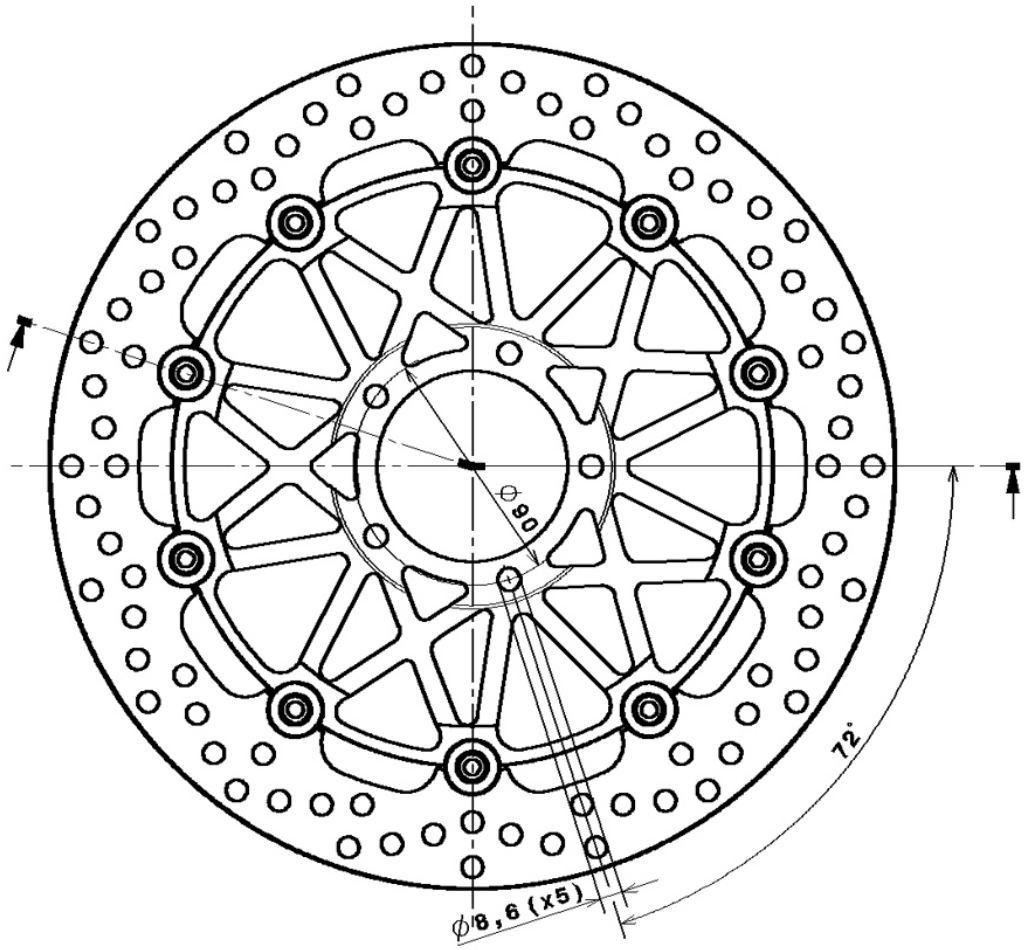

ITEMS INSIDE THE KIT

DESCRIPTION	QTY
BRAKE DISC DP 320x5,5	2
INSTRUCTION SHEET	1
BREMBO SMALL STICKER	2

DRAWING CHANGES

Pos.				
A	-	FIRST RELEASE	##.##.##	Deponti