| Drawn | brembo | BRAKE DISC KIT DP ⌀310 | 208.9737.46 ▭ |
|---|---|---|---|
| Deponti | | | Date 02.08.24 |
| Checked | | | |
| Caronia | | | |

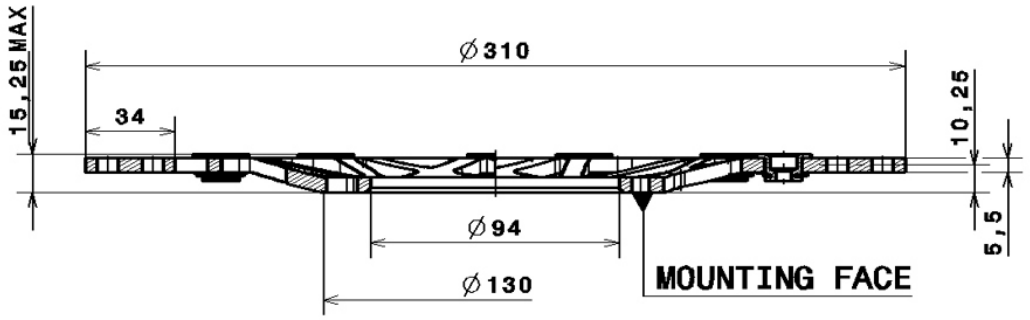


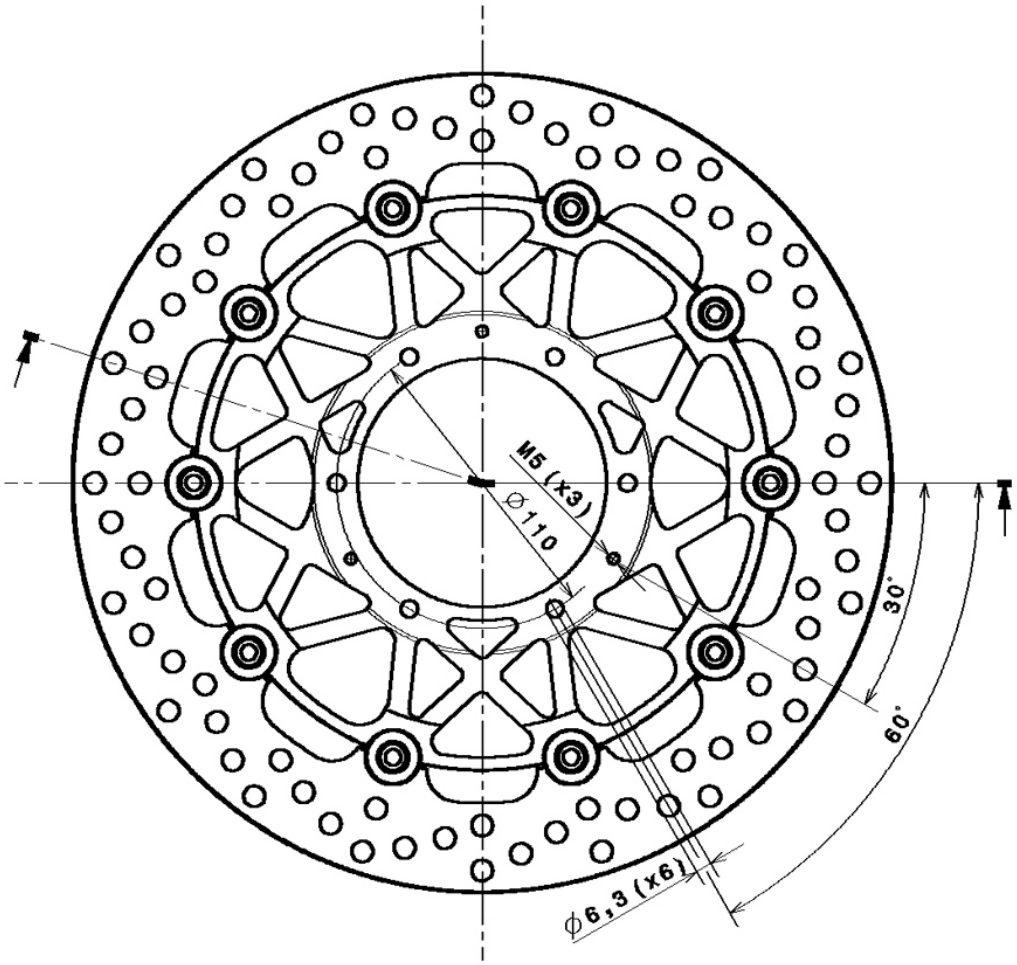


## ITEMS INSIDE THE KIT

| DESCRIPTION | QTY |
|---|---|
| BRAKE DISC DP 310x5,5 | 2 |
| INSTRUCTION SHEET | 1 |
| BREMBO SMALL STICKER | 2 |

| DRAWING CHANGES | Pos. | FIRST RELEASE | ## ## ## | Deponti |
|---|---|---|---|---|
| | A | - | | |