Drawn	brembo	BRAKE DISC KIT DP ⌀310	208.9737.34 ▭
Deponti			Date 01.08.24
Checked			
Caronia			

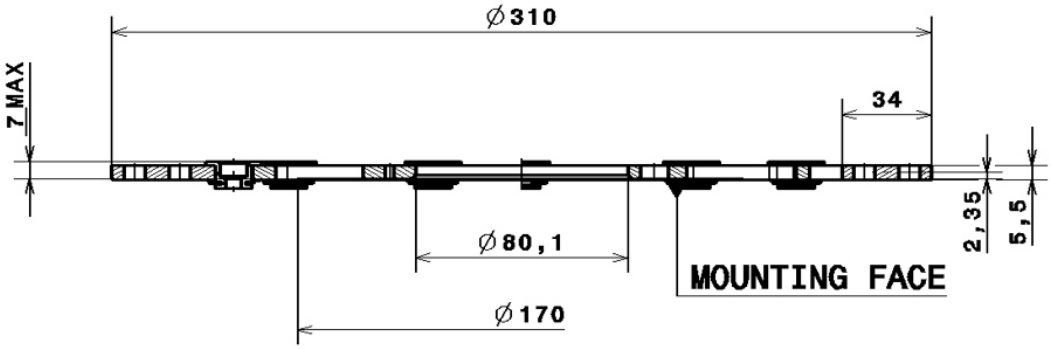

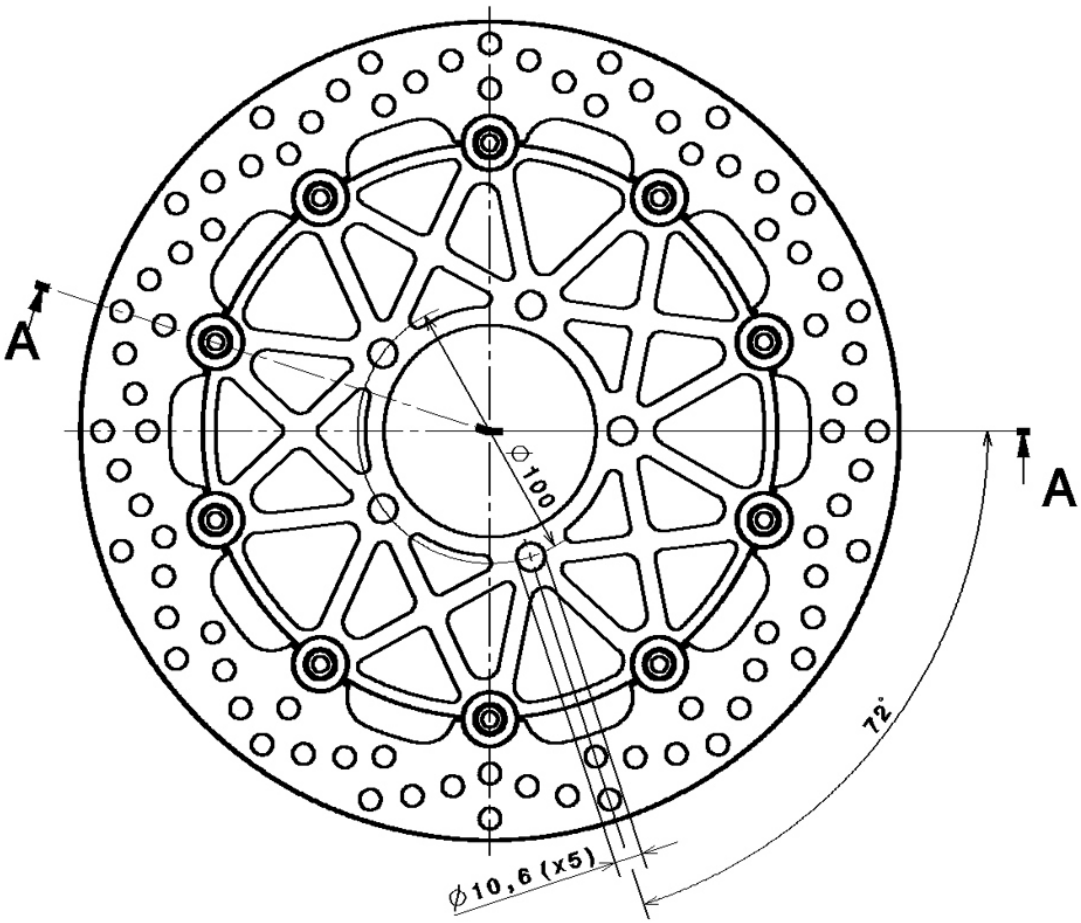

ITEMS INSIDE THE KIT

DESCRIPTION	QTY
BRAKE DISC DP 310x5,5	2
INSTRUCTION SHEET	1
BREMBO SMALL STICKER	2

DRAWING CHANGES	Pos.		Pos.		Pos.		Pos.		Pos.		Pos.	
	A	-	FIRST RELEASE	##	##	##	Deponti					