Drawn	brembo	BRAKE DISC KIT DP ⌀310	208.9737.32 ▭
Deponti			Date 01.08.24
Checked			
Caronia			

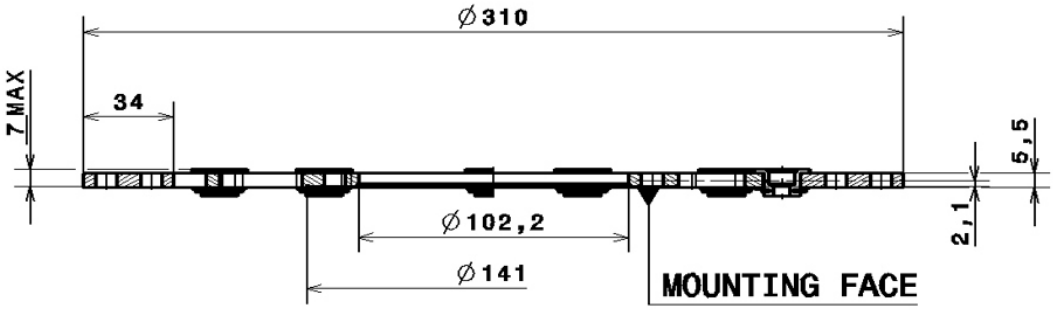

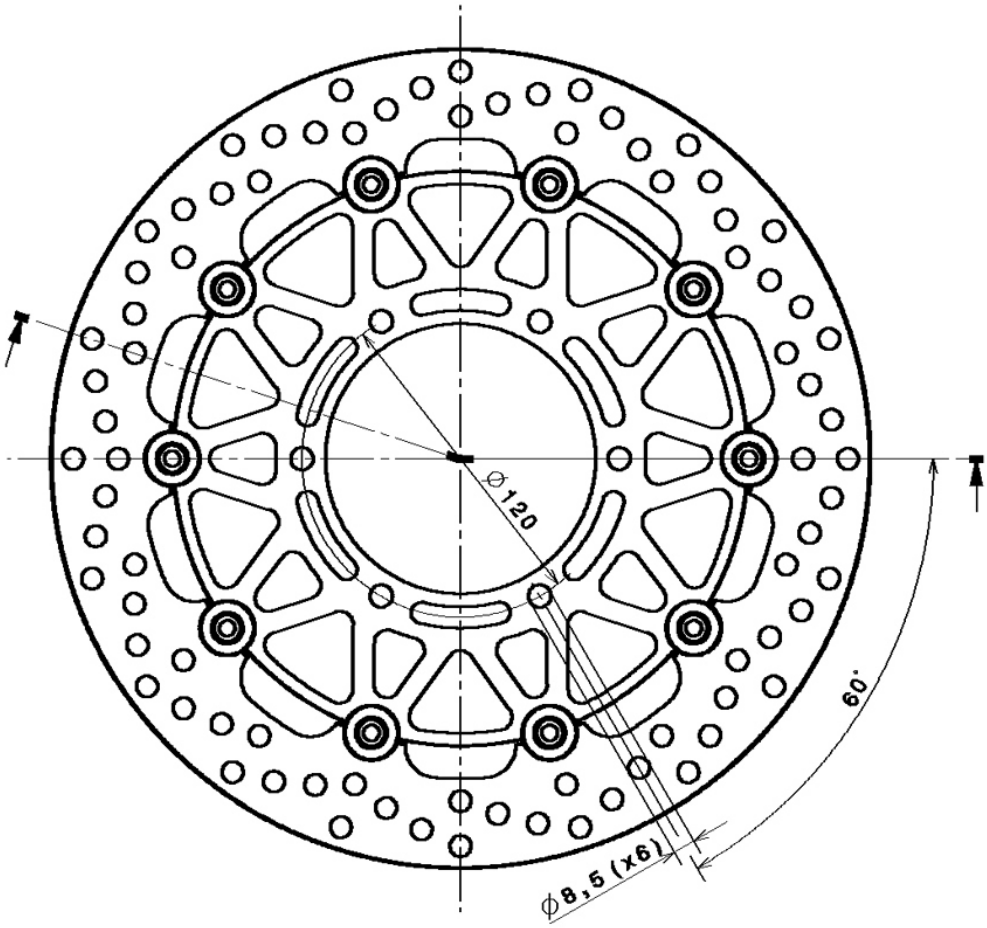

ITEMS INSIDE THE KIT

DESCRIPTION	QTY
BRAKE DISC DP 310x5,5	2
INSTRUCTION SHEET	1
BREMBO SMALL STICKER	2

DRAWING CHANGES	Pos.	FIRST RELEASE	## ## ##	Deponti
	A	-		