Drawn	brembo	BRAKE DISC KIT DP ⌀320	208.9737.11 ▭
Deponti			Date 25.07.24
Checked			
Caronia			

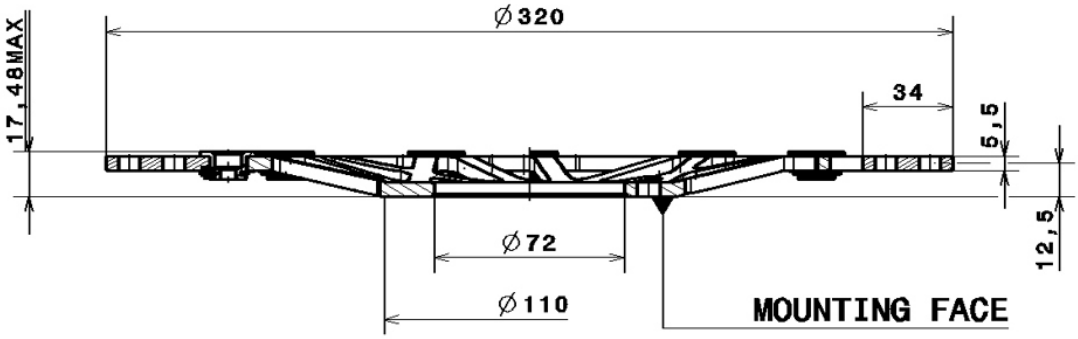

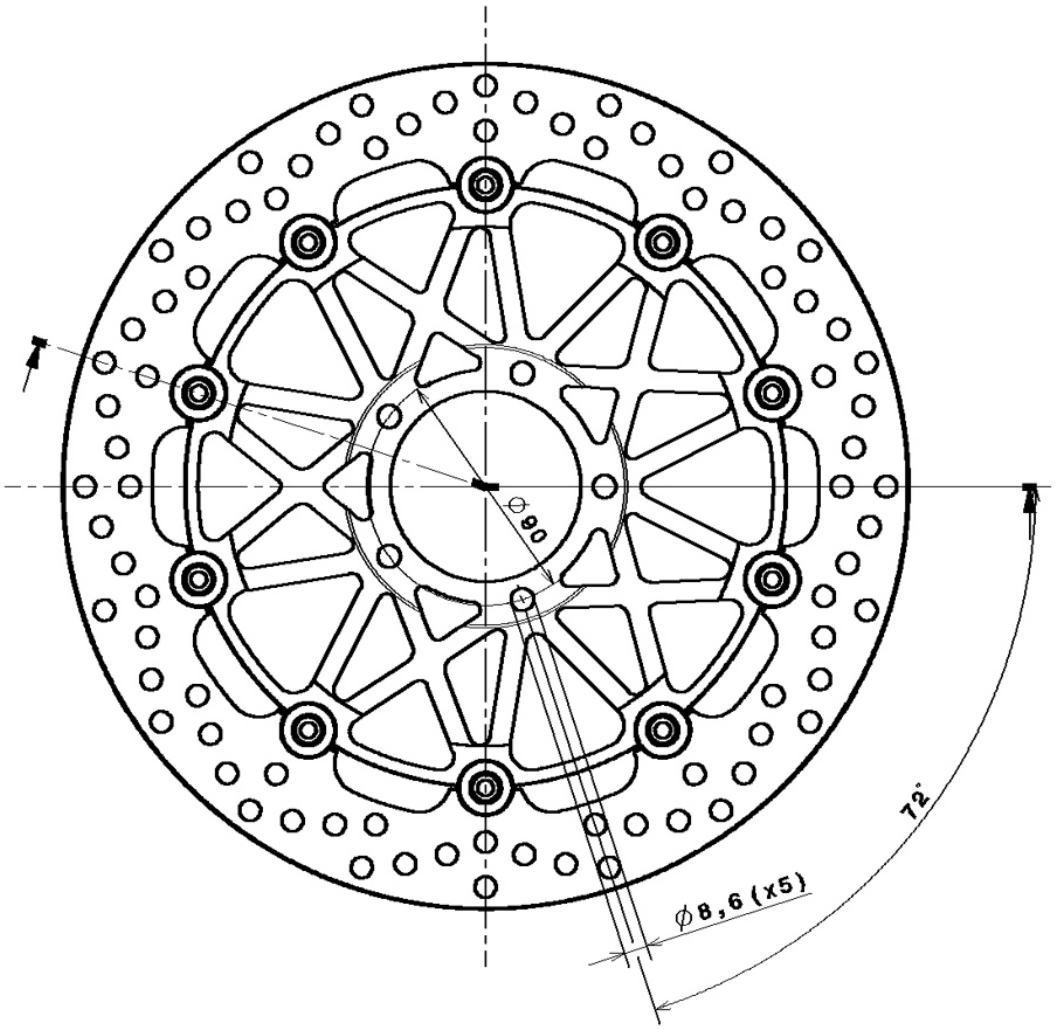

ITEMS INSIDE THE KIT

DESCRIPTION	QTY
BRAKE DISC DP 320x5,5	2
INSTRUCTION SHEET	1
BREMBO SMALL STICKER	2

DRAWING CHANGES	Pos.	FIRST RELEASE	## ## ##	Deponti
	A	-		